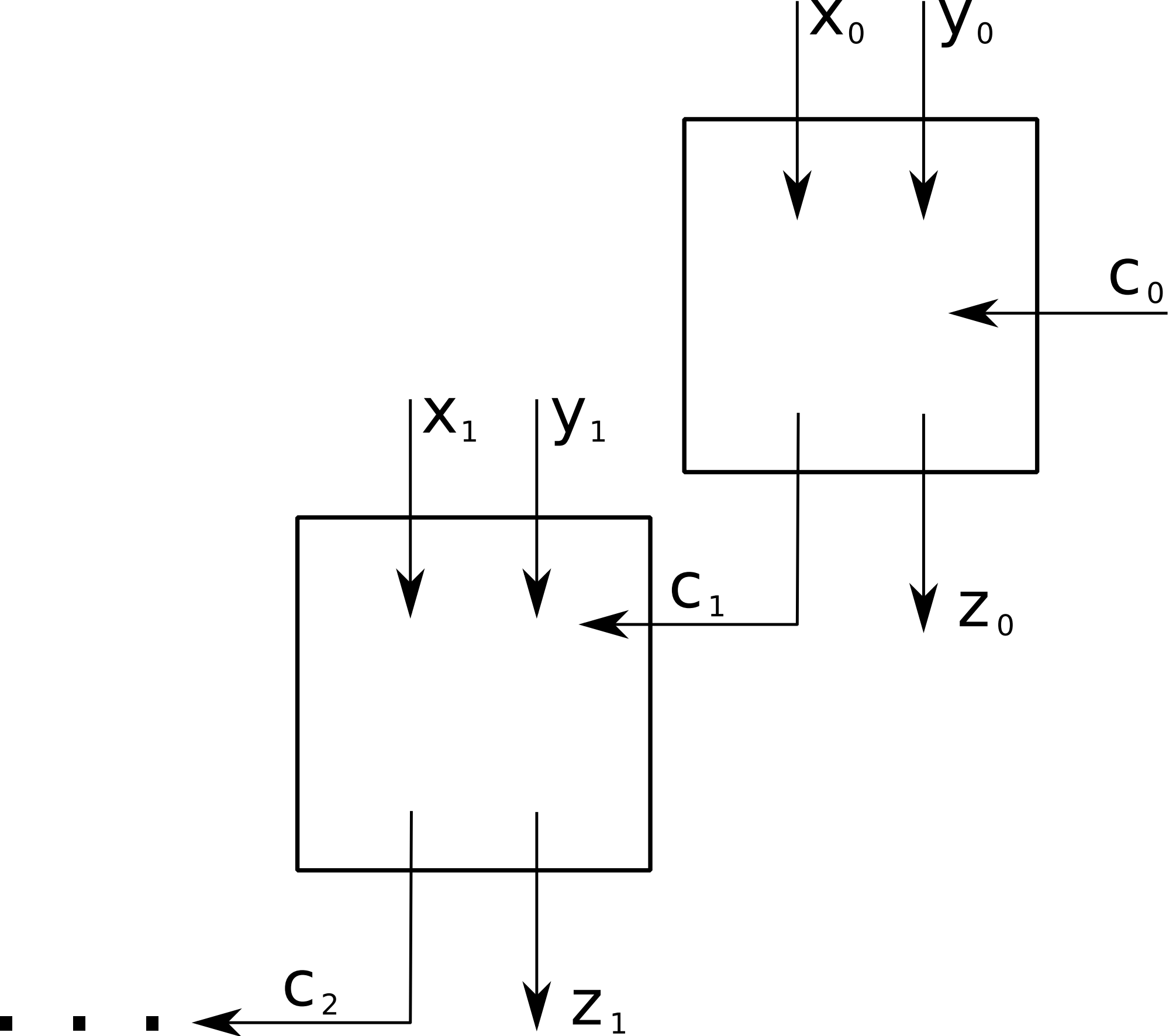
x_0
y_0
c_0
x_1
y_1
c_1
z_0
c_2
z_1